MJ 1647-01EREV.03


**ANEST IWATA Europe S.r.l.**
46, Corso Vigevano 10155, Torino Italy
Direct Tel. +39 011 - 24 80 868
Fax +39 011 - 22 74 406
info@anest-iwataeu.com
**www.anest-iwataeu.com**


## European Sales Branches:


**ANEST IWATA Italia S.r.l.**
46, Corso Vigevano 10155, Torino (Italy)
Tel. diretto +39 011 - 24 80 868 - Fax +39 011 - 85 19 44
info@anest-iwata.it **www.anest-iwata.it**

**ANEST IWATA Europe S.r.l.**
SUCURSAL ESPAÑA Y PORTUGAL
Avda.del Maresme, 44-46 Planta 2 OF. 25 / 08918 - Badalona (Barcelona)
Tel.:+34 933 20 59 93 - Fax.:+34 933 20 55 64 -
info@anest-iwata.es **www.anest-iwata.es**

**ANEST IWATA Europe S.r.l.**
NIEDERLASSUNG DEUTSCHLAND
Dorfäckerstr. 25, 74248 Ellhofen
Telefon: +49 (0)7134- 917368 - Fax: +49 (0)7134 - 917378
Handy: +49 (0)172 - 62 74 542
info@anest-iwata.de **www.anest-iwata.de**

**ANEST IWATA Scandinavia AB.**
Ögärdesvägen 6C, 433 30 PARTILLE
Tel. +46 (0)31 - 340 28 60 - Fax +46 (0)31 - 340 28 69
info@anest-iwata.se **www.anest-iwata.se**

**ANEST IWATA France S.A.**
25 rue de Madrid - BP 7405 38074 St Quentin Fallavier
Tél. +33 (0)4 - 74 94 59 69 - Fax +33 (0)4 - 74 94 34 39
info@anest-iwata.fr **www.anest-iwata.fr**

**ANEST IWATA U.K. Ltd.**
Unit 10 Little End Road - Eaton Socon
St. Neots - CAMBRIDGESHIRE
PE19 8JH
Tel.: +44 (0) 1480 405419 Fax: +44 (0) 1480 217610
enquiries@anest-iwata.co.uk **www.anest-iwata.co.uk**


ANEST IWATA

Instruction Manual

# NEW 71 SPRAY GUN

**GB** Before use, adjustment or maintenance, it is important to read this instruction manual very carefully. This manual must be stored in a safe place for any future reference that may be necessary.

This **ANEST IWATA** spray guns kit complies to ATEX regulations 94/9/EC, protection level: II 2 G X
II 2 G X Suitable for using Zones 1 and 2.
X marking: Any static electricity discharge from the spray gun is to be diverted to the ground via the conductive air hose as stipulated.

## IMPORTANT

This spray gun should be operated only by an adequately trained operator, for safe use and maintenance of the equipment. Any misuse or handling other than those indicated in this Instruction Manual is not covered by guarantee. ANEST IWATA disclaims all responsibility for any accident or damage caused by failure to observe the operational and safety procedures as from this manual. In the interest of user friendliness, this manual contains information in a brief and concise form.
For any additional information you may require regarding spray guns operations, or if any missing parts or any damage during transportation is found, please contact your nearest ANEST IWATA Company (see last cover page).

Be sure to observe warnings and cautions in this instruction manual.
If not, it can cause paint ejection and serious bodily injury by drawing organic solvent.
Be sure to observe following ⚠ marked items which are especially important.

| | |
|---|---|
| ⚠ **WARNING** | Indicates a potentially hazardous situation which, if not avoided, may result in serious injury or loss of life. |
| ⚠ **CAUTION** | Indicates a potentially hazardous situation which, if not avoided, may result in minor or moderate injury or property damage. |
| **IMPORTANT** | Indicates notes which we ask you to observe. The safety precautions in this instruction manual are the minimum necessary conditions. Follow national and local regulations regarding fire prevention, electricity and safety as well as your own company regulations. |

## IMPORTANT SPECIFICATIONS

| | | | |
|---|---|---|---|
| Max. Pressure: | 6.8 bar (98 PSI) | Max. Temperature: | |
| Noise Level (LAeqT) | 74.8 dB (A) | Atmosphere | 5 ~ 40 °C |
| Spray conditions | Recommended | Air and fluid | 5 ~ 43 °C |
| Measuring point | 1m backwards from gun, 1,6 m height | Air connection: | G 1/4” |
| | | Fluid connection: | G 1/4” |

## TECHNICAL SPECIFICATIONS

| Model | Fluid nozzle ø mm (in) | *Atomizing air pressure bar (PSI) | Air consumption l/min (cfm) | Fluid output ml/min. | Pattern width mm (in) | Air cap set mark | Weight |
|---|---|---|---|---|---|---|---|
| **NEW 71 Pressure feed** | | | | | | | 475 g |
| NEW 71 0 | 0.8 (0.031) | 3.5 (50) | 240 (8.5) | 200 | 190 (7.5) | 0 | |
| **NEW 71 Suction feed** | | | | | | | |
| NEW 71 1S | 1.0 (0.039) | 3.0 (43) | 75 (2.7) | 95 | 100 (3.9) | 1S | |
| NEW 71 2S | 1.3 (0.051) | | 85 (3.0) | 135 | 135 (5.3) | 2S | |
| NEW 71 3S | 1.5 (0.059) | | 165 (5.8) | 180 | 170 (6.7) | 3S | |
| NEW 71 4S | 1.8 (0.071) | | 230 (8.2) | 195 | 200 (7.9) | 4S | |
| NEW 71 21S | 1.3 (0.051) | | 195 (6.9) | 140 | 155 (6.1) | 21S | |
| NEW 71 31S | 1.5 (0.059) | | 230 (8.2) | 170 | 170 (6.7) | 31S | |
| **NEW 71 Gravity feed** | | | | | | | |
| NEW 71 1G | 1.0 (0.039) | | 75 (2.7) | 110 | 120 (4.7) | 1G | |
| NEW 71 2G | 1.3 (0.051) | | 85 (3.0) | 155 | 155 (6.1) | 2G | |
| NEW 71 3G | 1.5 (0.059) | | 165 (5.8) | 210 | 185 (7.3) | 3G | |
| NEW 71 4G | 1.8 (0.071) | | 230 (8.2) | 220 | 230 (9.1) | 4G | |
| NEW 71 21G | 1.3 (0.051) | | 195 (6.9) | 160 | 165 (6.5) | 21G | |
| NEW 71 31G | 1.5 (0.059) | | 230 (8.2) | 190 | 185 (7.3) | 31G | |

***** Atomizing air pressure means air pressure at gun inlet when trigger is pulled and air flows.

Manufactured by:
**ANEST IWATA Corporation** 3176,Shinyoshida-cho, Kohoku-ku, Yokohama, 223-8501 Japan

# SAFETY WARNINGS

## FIRE OR EXPLOSION HAZARD

**1. Spark and open flames are strictly prohibited.**
Paints can be highly flammable and can cause fire.
Avoid any ignition sources such as smoking, open flames, electrical goods, etc.

**2. Never use the following HALGOGENATED HYDROCARBON SOLVENTS**
which can cause cracks or dissolution on gun body (aluminum) by chemical reaction.
- Unsuitable solvents methyl chloride, dichloromethane, 1.2-dichloroethane,carbon tetrachloride, trichloroethylene, 1.1.1-trichloroethane
- Be sure that all fluids and solvents are compatible with gun parts.
We are ready to supply a material list used in the product.

**3. Securely ground spray gun by using air hose with built-in ground wire.**
Ground wire : Less than 1MΩ Check the earth stability periodically.
If not, insufficient grounding can cause fire and explosion due to static electric sparking.

## IMPROPER USE OF EQUIPMENT

**1. Never point gun towards people or animals.**
If done, it can cause inflammation of eyes and skin or bodily injury.

**2. Never exceed maximum operating pressure and maximum operating Temperature.**

**3. Be sure to release air and fluid pressures before cleaning, disassembling or servicing.**
If not, remaining pressure can cause bodily injury due to improper operation or scattering of cleaning liquid.
In order to release pressure, first stop supply of compressed air, fluid and thinner to spray gun. Then remove fluid adj. knob and pull fluid needle set towards you.

**4. Tip of fluid needle set has a sharp point.**
Do not touch the tip of fluid needle during maintenance for the protection of the human body.

## PROTECTION OF HUMAN BODY

**1. Use in a well-ventilated site by using spray booth.**
If not, poor ventilation can cause organic solvent poisoning and catch fire.

**2. Always wear protective gear safety glasses, mask, gloves.**
If not, cleaning liquid, etc., can cause inflammation of eyes and skin.
If you feel something wrong with eyes or skin, immediately see a doctor.

**3. Wear earplugs if necessary.**
Noise level can exceed 85 dB(A), depending on operating conditions and painting site

**4.If operators pull the trigger many times during operation, it may cause carpal tunnel syndrome.**
Be sure to take a rest if you feel tired.

## OTHER PRECAUTIONS

**1. Never alter this spray gun.**
If done, it can cause insufficient performance and failure.

**2. Enter working areas of other equipment (robots, reciprocators, etc.) after machines are turned off.**
If not, contact with them can cause injury.



# COMMENTS

# SPARE PARTS LIST

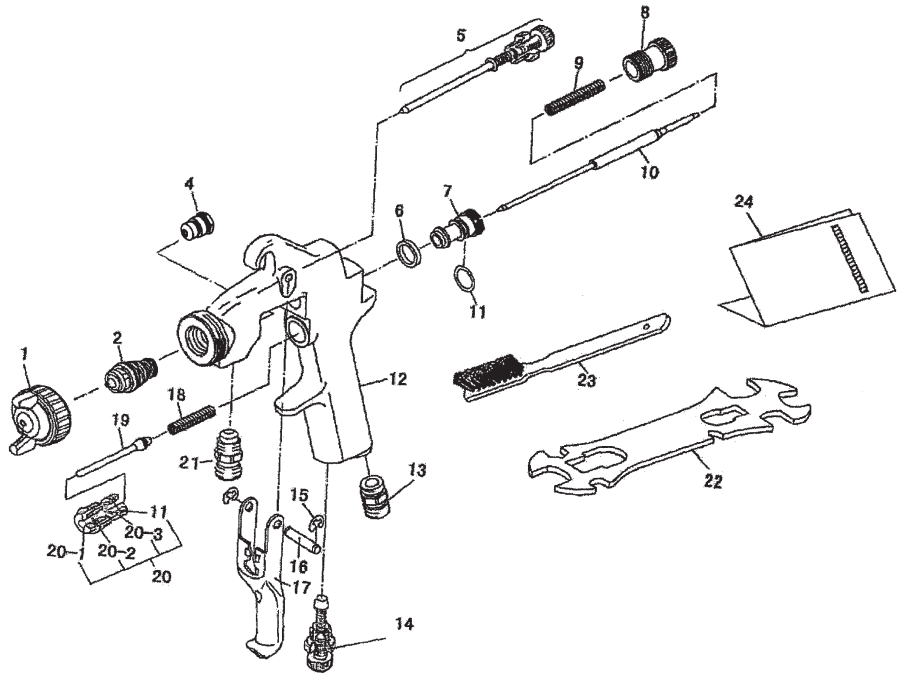


## PARTS LIST

| DESCRIPTION | REF.PART |
|---|---|
| AIR CAP SET | 1 |
| FLUID NOZZLE | 2 ● |
| NEEDLE PACKING CARTRIDGE | 4 |
| PATTERN ADJ. SET | 5 |
| GASKET SET | 6 |
| NEEDLE GUIDE | 7 |
| FLUID ADJ. KNOB | 8 |
| FLUID NEEDLE SPRING | 9 |
| FLUID NEEDLE SET | 10 ● |
| O RING | 11 ● |
| GUN BODY - PRESSURE, SUCTION | 12 |
| GUN BODY - GRAVITY | 12 |
| AIR NIPPLE | 13 |
| AIR ADJ. SET | 14 |
| E STOPPER | 15 |
| TRIGGER STUD | 16 |
| TRIGGER | 17 |
| AIR VALVE SPRING | 18 |
| AIR VALVE | 19 ● |
| AIR VALVE SEAT SET | 20 |
| AIR VALVE PK. SEAT | 20-1 |
| AIR VALVE SEAT | 20-2 |
| AIR VALVE PACKING SET | 20-3 ● |
| FLUID NIPPLE | 21 |
| BRUSH | 23 |
| INSTRUCTION MANUAL | 24 |

**FLUID NOZZLE-FLUID NEEDLE SET COMBINATION**

| Fluid nozzle | | Fluid needle set |
|---|---|---|
| Orifice mm(in) | Mark | Mark |
| 0.8 (0.031) | 0N | 0 |
| 1.0 (0.039) | 1N | 1 |
| 1.3 (0.051) | 2N | 2 |
| 1.5 (0.059) | 3N | 3 |
| 1.8 (0.071) | 4N | 4 |

● **Marked parts are wearable parts.**

**NOTE:** When ordering parts, specify gun's model, part name with ref.No. and marked No.of air cap set, fluid nozzle and fluid needle.When replacing fluid nozzle or/and fluid needle for pressure feed application, please order nozzle needle set.



## OTHER PRECAUTIONS

**3. Never spray foods or chemicals through this gun.**
If done, it can cause accident by corrosion of fluid passages or adversely affect health by mixed foreign matter.

**4. If something goes wrong, immediately stop operation and find the cause. Do not use again until you have solved the problem.**

# HOW TO CONNECT

**CAUTION**

- **Use clean air filtered through air dryer and air filter. If not, dirty air can cause painting failure.**
- **When you use this gun for the first time after purchasing, adjust fluid needle packing set. Slowly tighten fluid packing seat and loosen a bit when fluid needle set does not return smoothly, and adjust so that fluid needle set smoothly moves.**
- **When you use this gun for the first time after purchasing, clean fluid passages spraying thinner and remove rust preventive oil.**
  **If not, remaining preventive oil can cause painting failure such as fish eyes.**
- **Firmly fix hose or container to spray gun. If not, disconnection of hose and drop of container can cause bodily injury.**

1. Connect an air hose to air nipple tightly.
2. Connect a fluid hose or a container to fluid nipple tightly.
3. Flush the gun fluid passage with a compatible solvent.
4. Pour paint into container, test spray and adjust fluid output as well as pattern width

# HOW TO OPERATE

Suggested air pressure is 3.0 to 3.5 bar (43 to 50 PSI)

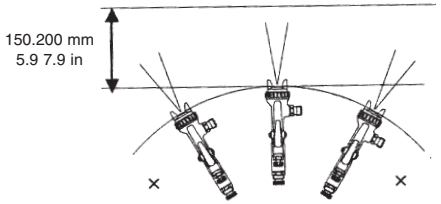


Recommended paint viscosity differs according to paint property and painting conditions. 15 to 23 sec. / Ford cup#4 is recommendable.

Keep fluid output as small as possible to the extent that the job will not be hindered. It will lead to better finishing with fine atomization.

Set the spray distance from the gun to the work piece as near as possible within the range of 150_200 mm (5.9_7.9 in).

The gun should be held so that it is perpendicular to the surface of the workpiece at all times. Then, the gun should move in a straight and horizontal line. Arcing the gun causes uneven painting.

# MAINTENANCE AND INSPECTION

**WARNING**

**First release air and pressure fully according to item No. 3 of "Improper use of equipment" of WARNING on page 2.**

- **Tip of fluid needle set has a sharp point. Do not touch the tip of needle valve during maintenance for protection of the human body.**
- **Be careful not to damage the tip of the fluid nozzle or put your hand on it.**
- **Only an experienced person who is fully conversant with the equipment can do maintenance and inspection.**

**CAUTION**

- **Never use commercial or other parts instead of ANEST IWATA original spare parts.**
- **Never immerse the whole gun into liquid such as thinner.**
- **Never damage holes of air cap fluid nozzle or fluid needle.**

| Step-by-step procedure | Important |
|---|---|
| 1.Pour remaining paint to another container. Clean fluid passages and air cap set. Spray a small amount of thinner to clean fluid passages. | 1.Incomplete cleaning can fail pattern shape and uniform particles. Especially clean fully and promptly after use with two-component paint. |
| 2.Clean each section with brush soaked with thinner and wipe out with waste cloth. | 2.Do not immerse the whole gun in thinner. If done, it can damage parts. When cleaning, never scratch any holes of air cap set and fluid nozzle, and fluid needle set. |
| 3. Before disassembly, fully clean fluid passages.<br>(1) Disassemble fluid nozzle.<br>(2) Disassemble fluid needle set.<br>You do not need to remove fluid adj. guide set from gun body.<br>Remove fluid adj. knob and fluid needle spring, and then pull out fluid needle spring, and then pull out fluid needle set from back of fluid adj. guide set. | 3.During disassembly, do not scratch seat section.<br>(1) Remove fluid nozzle after removing fluid needle set or while keeping fluid needle pulled, in order to protect seat section.<br>(2) Be careful when handling tip of fluid needle set since it is sharp. Disassemble fluid adj. guide set as little as possible. |
| 4.To adjust fluid needle packing set, while keeping fluid needle set inserted, Tighten fluid needle packing seat by hand and then tighten further by spanner. | 4.Too much tightening of fluid needle packing set can cause bad movement of fluid needle set and fluid leakage from the tip of fluid needle set. |
| 5.In order to assemble air valve, first assemble air valve & air valve spring & fluid adj. guide set together. Next, insert fluid needle set into fluid adj. guide set, then fit it to gun body set and screw fluid adj. guide set. | 5.If you try to fit air valve spring and air valve to gun body set without fluid needle set, air valve will not be fitted correctly and packing inside fluid adj. guide set will be damaged. |
| 6.Turn pattern adj. knob or air adj. knob counterclockwise to fully open. And then tighten pattern adj. set or air adj. set.. | 6.If pattern adj.Knob or air adj. Knob are not fully opened, tip of it can contact and damage fluid nozzle and cause seizure of thread. |
| **Where to inspect** | **Parts replacement standard** |
| 1.Each hole passage of air cap and fluid nozzle | Replace if it is crushed or deformed. |
| 2.Packing and O ring | Replace if it is deformed or worn out. |
| 3.Leakage from seat section between fluid nozzle and fluid needle set | Replace them if leakage does not stop after fully cleaning fluid nozzle and fluid needle set. If you replace fluid nozzle or fluid needle set only, fully match them and confirm that there is no leakage. |



# TROUBLESHOOTING

| Spray Pattern | Problems | Remedies |
|---|---|---|
| 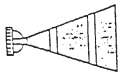 **Fluttering** | 1. Air enters between fluid nozzle and tapered seat of gun body.<br>2. Air is suctioned from fluid needle packing set<br>3. Air enters fluid container fitting nut or fluid hose joint. | 1. Remove fluid nozzle to clean seat. If it is damaged, replace nozzle.<br>2. Tighten fluid needle packing.<br>3. Fully tighten joint section. |
| 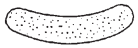 **Crescent** | 1. Paint buildup on air cap partially clogs horn holes. Air pressure from both horns differs. | 1. Remove obstructions from horn holes with attached brush. But do not use metal objects to clean horn holes. |
| **Inclined** | 1. Paint buildup or damage on fluid nozzle circumference and air cap center.<br>2. Fluid nozzle is not properly fitted. | 1. Remove obstructions. Replace if damaged.<br>2. Remove fluid nozzle, clean seated section |
| **Split** | 1. Paint viscosity too low.<br>2. Fluid output too high. | 1. Add paint to increase viscosity.<br>2. Tighten fluid adj. knob to reduce fluid output or turn pattern adj. knob clockwise. |
| **Heavy Center** | 1. Paint viscosity is too high.<br>2. Fluid output is too low. | 1. Add thinner to reduce viscosity.<br>2. Turn fluid adj. knob counter-clockwise to increase fluid output. |
| **Spit** | 1. Fluid nozzle and fluid needle set are not seated properly.<br>2. The first-stage travel of trigger (when only air discharges) decreases.<br>3. Paint buildup inside air cap set. | 1. Clean or replace fluid nozzle and fluid needle set.<br>2. Replace fluid nozzle and fluid needle set.<br>3. Clean air cap set. |

# PROBLEMS AND REMEDIES

| Problem | Where it occurred | Parts to be checked | Cause | Remedy: Retighten | Adjust | Clean | Replace |
|---|---|---|---|---|---|---|---|
| Air leaks (from tip of air cap) | Air valve set | Air valve | *Dirt or damage on seat | | | x | x |
| | | Air valve seat set | *Dirt or damage on seat | | | x | x |
| | | | *Wear on air valve spring | | | | x |
| | | O ring | *Damaged or deteriorated | | | | x |
| Paint leaks | Fluid nozzle | Fluid nozzle - fluid needle set | *Dirt, damage, wear on seat | | | x | x |
| | | | *Loose fluid needle adj. knob | | x | | |
| | | | *Wear on needle spring | | | | x |
| | | Fluid nozzle - gun body | *Insufficient tightening | x | | | |
| | | | *Dirt or damage on seat | | | x | x |
| | | Fluid needle - packing set | *Needle does not return due to packing set too tight | | x | | x |
| | | | *Needle does not return due to paint buildup on fluid needle | | x | x | |
| | Fluid needle | Needle packing set | *Wear | x | | | x |
| | | Packing seat | *Insufficient tightening | x | | | |
| Paint does not flow | Tip of gun | Fluid adj. knob | *Insufficient opening | | x | | |
| | | Tip hole of nozzle | *Clogged | | | x | |
| | | Paint filter | *Clogged | | | x | x |